Counter with parallel load

Tuesday, 12 March 2024 11:23 AM

PS	I	T	NS
0	0	0	0
0	1	1	1
1	0	1	0
1	1	0	1

$\Rightarrow T = Q \oplus I$

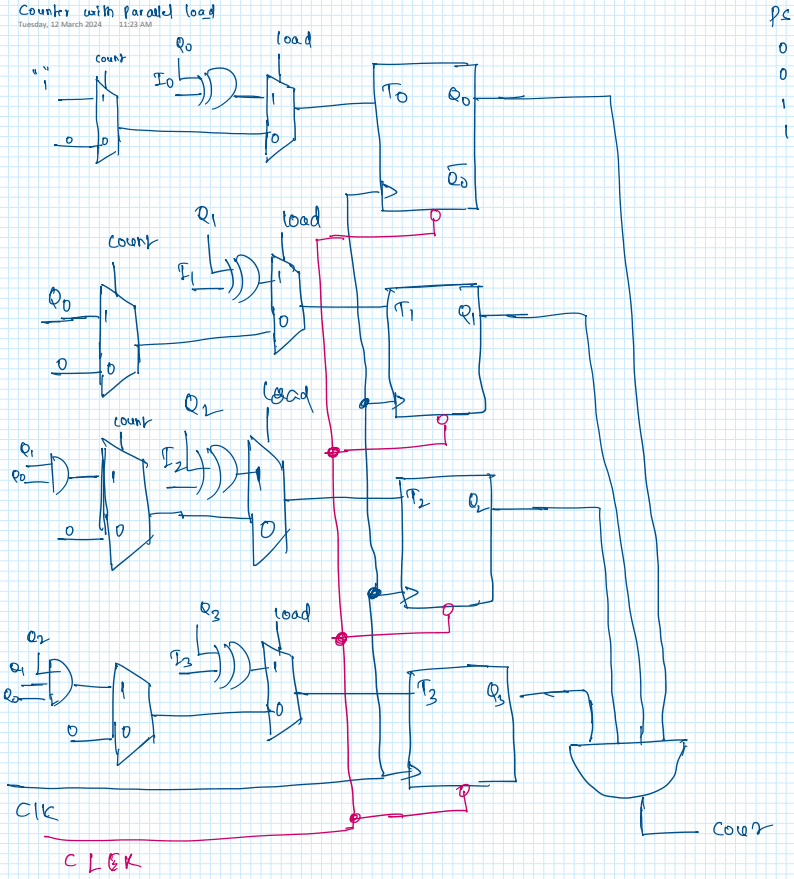

Same circuit using J-K FFs:

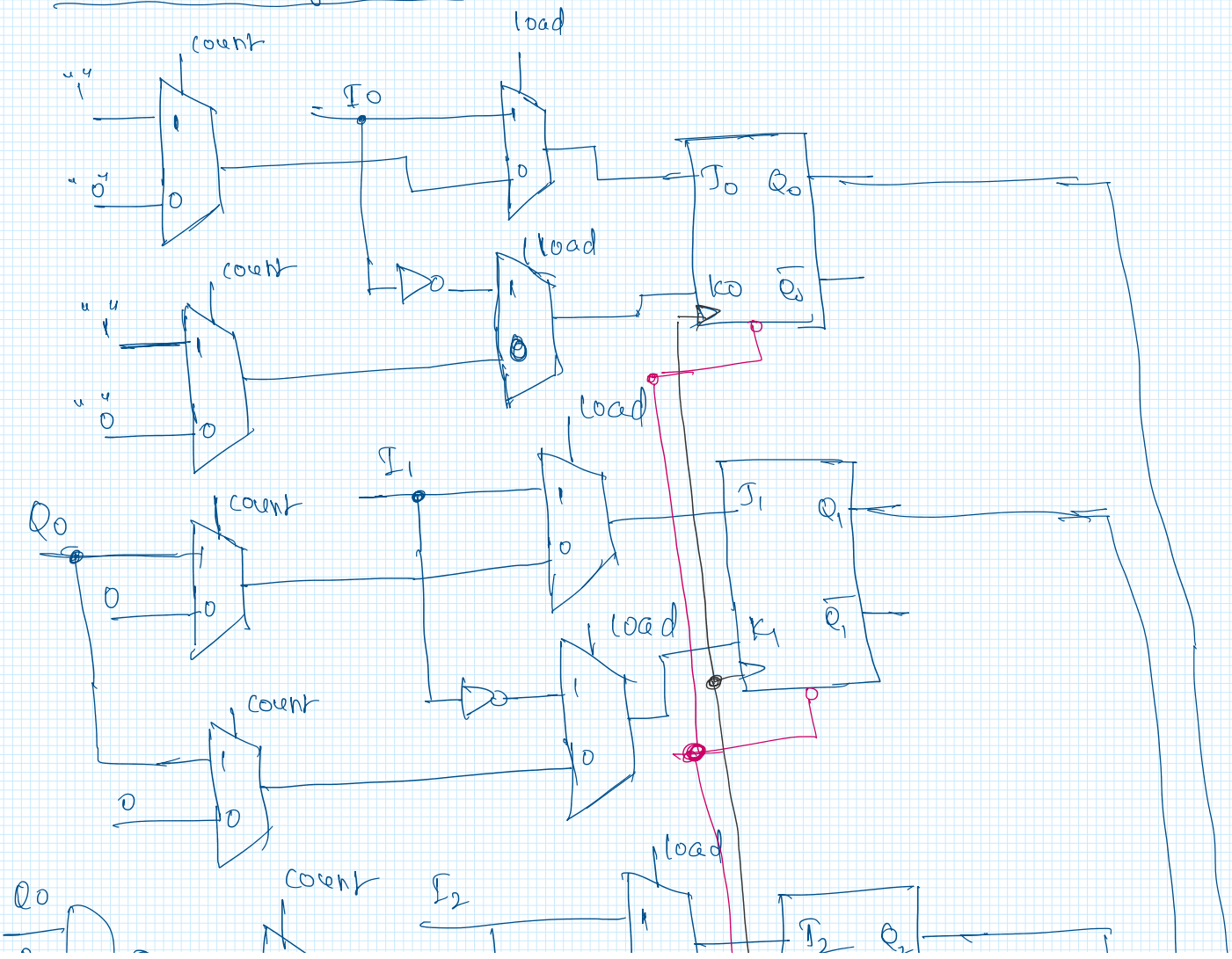

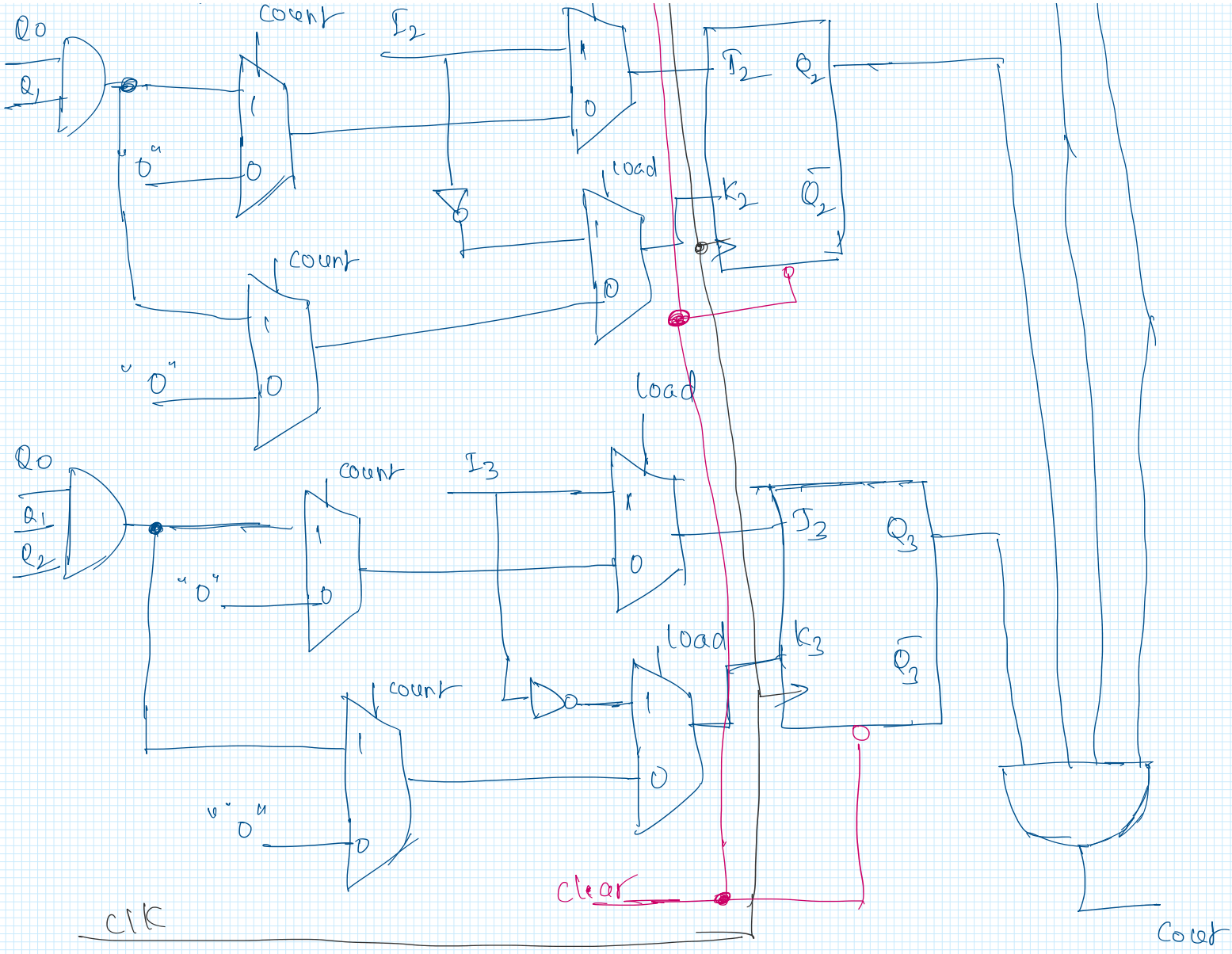
Q0
Q1
count
I2
load
J2
Q2
K2
Q̄2
"0"
count
"0"
load
Q0
Q1
Q2
count
I3
J3
Q3
K3
Q̄3
load
count
"0"
"0"
clear
clk
Cout